Stormwater Detention/Infiltration/Retention System

HD Half-Module
part #314061

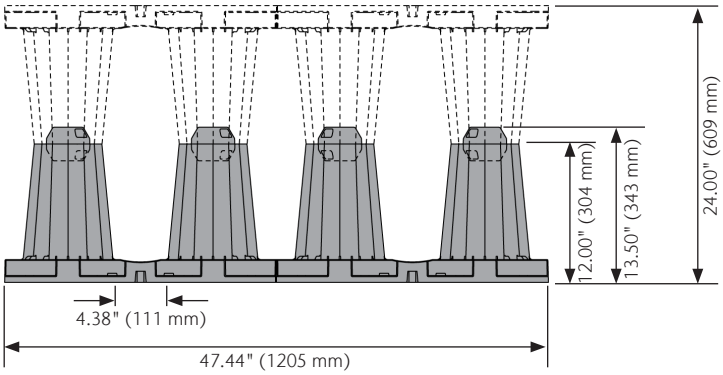

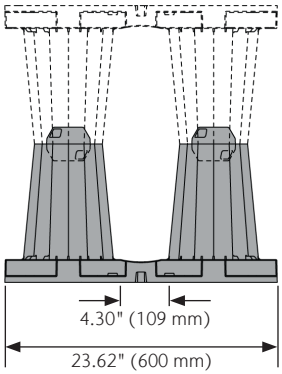

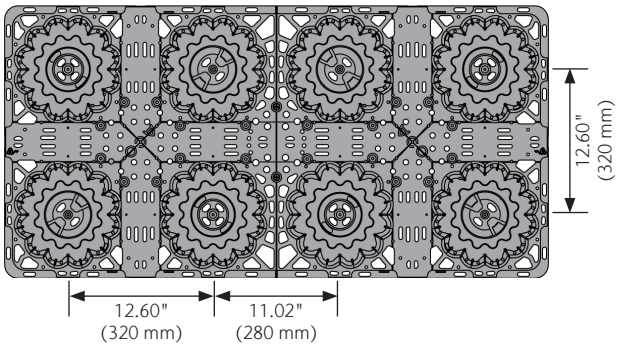

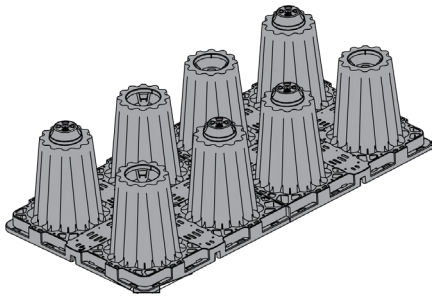

HD Side Panel
part #314062

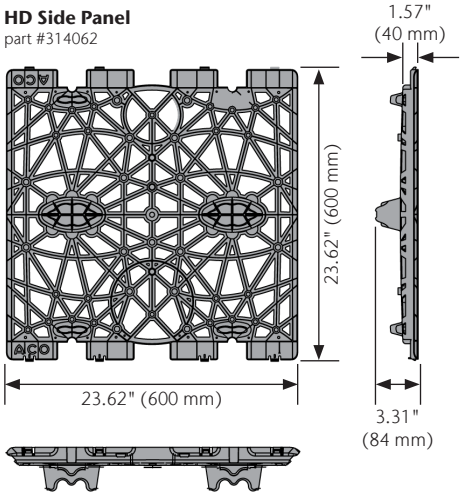

HD Top Cover
part #314022

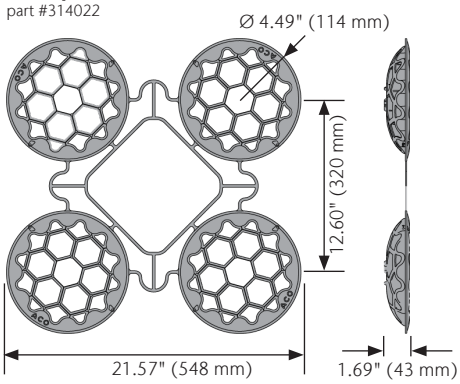

ACO Specification Information

Stormwater Detention/Infiltration/Retention System

Horizontal Pipe Connector
part #: see chart

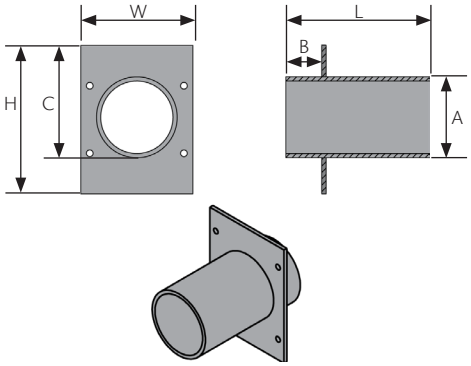

Part #	A in (mm)	B in (mm)	C in (mm)	H in (mm)	W in (mm)	L in (mm)
93139	SDR 35 - 4"	2.00 (51)	6.25 (158)	8.25 (209)	6.70 (170)	8.00 (203)
93145	SCH 40 - 4"	2.00 (51)	7.47 (189)	8.29 (210)	6.70 (170)	8.00 (203)
93140	SDR 35 - 6"	2.00 (51)	8.95 (227)	9.93 (252)	10.22 (259)	8.00 (203)
93146	SCH 40 - 6"	2.00 (51)	9.11 (231)	9.93 (252)	10.22 (259)	8.00 (203)
93141	SDR 35 - 8"	2.00 (51)	10.46 (265)	11.39 (289)	11.64 (295)	8.00 (203)
93147	SCH 40 - 8"	2.00 (51)	10.57 (268)	11.39 (289)	11.64 (295)	8.00 (203)
93142	SDR 35 - 12"	2.00 (51)	13.48 (342)	14.30 (363)	16.66 (423)	8.00 (203)
93144	SCH 35 - 15"	2.00 (51)	17.28 (439)	19.25 (489)	19.25 (489)	8.00 (203)

Remote Access Cover (Vented)
part #314053

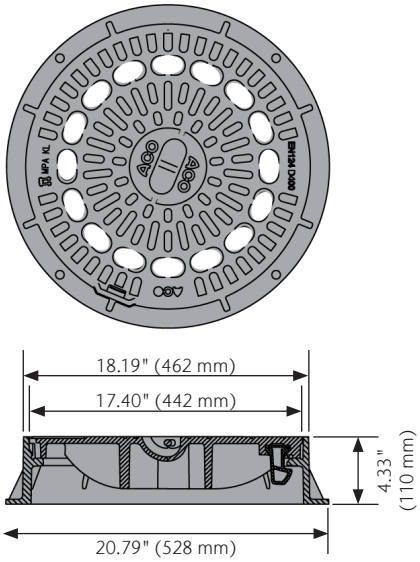

Remote Access Cover (Non-Vented)
part #314043

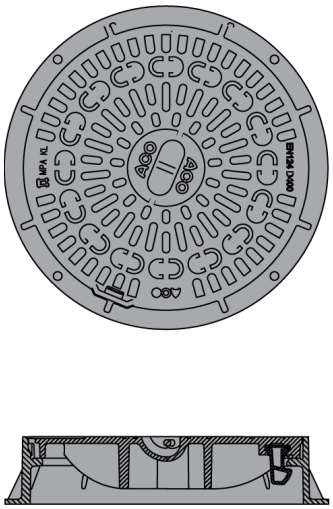

Inspection Point Cover
part #314044

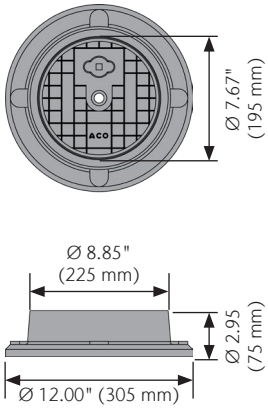

Remote Access Plate
part #314075

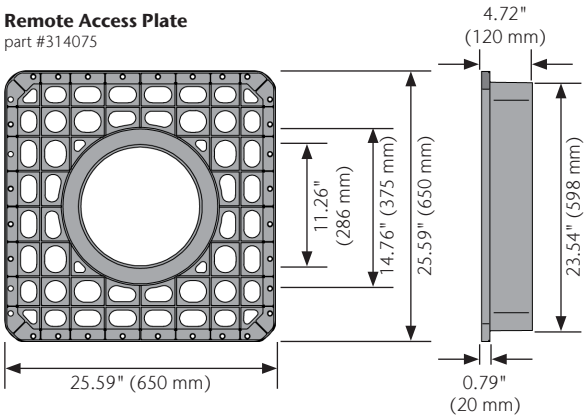

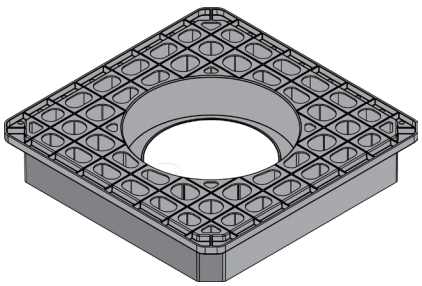

ACO Specification Information

Stormwater Detention/Infiltration/Retention System

HD Remote Access Unit
part #27034

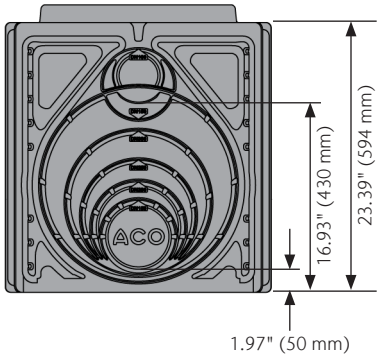

HD Remote Access Unit with Adapter Plate
part #138140

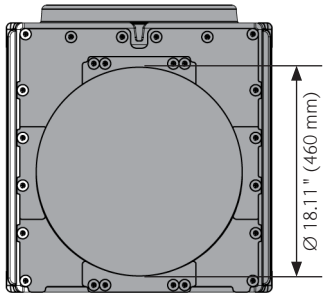

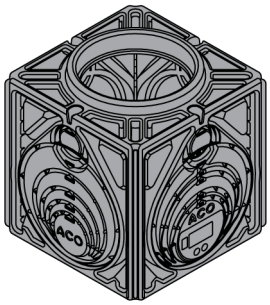

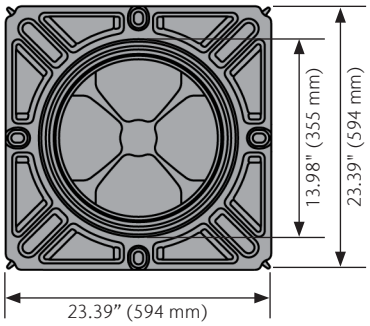

Extension Shaft
part #314038

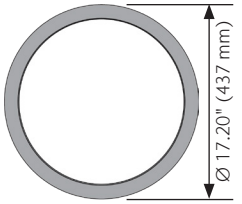

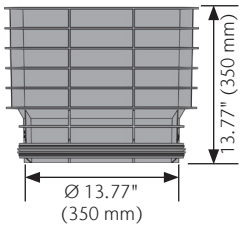

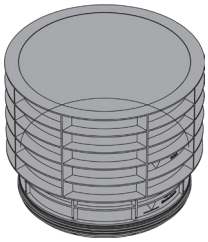

Extension Shaft with Pipe Socket
part #314039

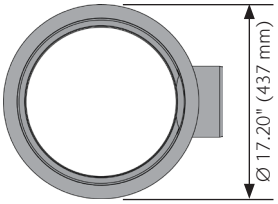

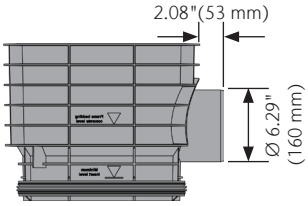

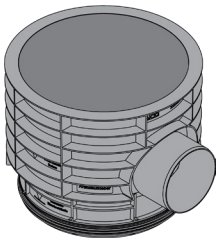

Vertical Inspection Point Connector
part #27018

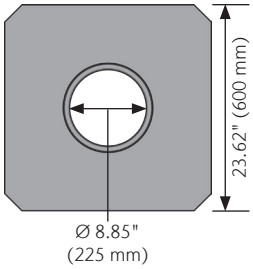

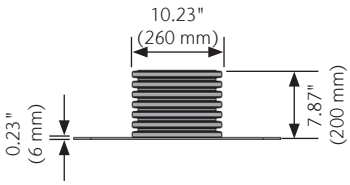

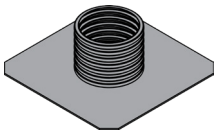

ACO Specification Information

Stormwater Detention/Infiltration/Retention System

ACO StormBrixx HD Parts Table	Part #	Length in (mm)	Width in (mm)	Depth in (mm)	Weight lbs (kg)
HD Half-Module	314061	47.44 (1205)	23.70 (602)	13.50 (343)	22.40 (10.20)
HD Side Panel	314062	23.62 (600)	23.62 (600)	2.17 (55)	3.79 (1.72)
HD Top Cover	314022	21.57 (548)	21.57 (548)	1.70 (43)	1.79 (0.81)
HD Layer Connector	314023	3.94 (100)	1.58 (40)	1.82 (46)	0.03 (0.02)
Remote Access Plate	314075	25.59 (650)	25.59 (650)	4.72 (120)	10.78 (4.90)
HD Remote Access Unit	27034	23.39 (594)	23.39 (594)	24.02 (610)	70.50 (31.98)
HD Remote Access Unit with Adapter Plate	138140	24.41 (620)	23.39 (594)	24.02 (610)	71.00 (32.21)
Remote Access Cover - Ductile Iron (Load Class D400)	314043	-	Ø 20.79 (528)	4.34 (110)	86.46 (39.30)
Remote Access Vented Cover - Ductile Iron (Load Class D400)	314053	-	Ø 20.79 (528)	4.34 (110)	83.60 (38.00)
Inspection Point Cover - Ductile Iron (Load Class D400)	314044	-	Ø 8.85 (225)	2.95 (75)	34.54 (15.70)
Extension Shaft	314038	-	Ø 17.21 (437)	13.78 (350)	4.84 (2.60)
Extension Shaft with Pipe Socket	314039	-	Ø 17.21(437)	13.78 (350)	6.16 (2.80)
Vertical Inspection Point Connector	27018	-	Ø 8.85* (225)	7.87 (200)	5.52 (2.50)
Horizontal Pipe Connectors					
SDR 35 - 4"	93139		4.00* (102)		1.90 (0.86)
SCH 40 - 4"	93145		4.00* (102)		1.90 (0.86)
SDR 35 - 6"	93140		6.00* (152)		3.30 (1.49)
SCH 40 - 6"	93146	8.00 (203)	6.00* (152)	-	3.30 (1.49)
SDR 35 - 8"	93141		8.00* (203)		4.40 (1.99)
SCH 40 - 8"	93147		8.00* (203)		4.30 (1.95)
SDR 35 - 12"	93142		12.00* (305)		7.00 (3.18)
SDR 35 - 15"	93144		15.00* (381)		10.80 (4.89)

*Internal width

Specifications

General
The stormwater Detention*/Infiltration*/Retention* system shall be ACO Stormbrixx HD as manufactured by ACO, Inc. Meets AASHTO H-25 and HS-25 loading conditions.

Materials
The half-module shall be manufactured from polypropylene and have minimum properties as follows:
Tensile impact strength:
152 ft-lb/in^2 (319 kj/m^2)
Tensile strength, ultimate:
3,480 psi (23,994 kpa)
Water absorption: 0.01%
Frost proof, salt proof and fuel and oil resistant

The stormwater tank shall provide an average 95% open area[1], holding up to 14.73[1] ft^3 (0.42 m^3) per cell (2 tank bodies assembled) and offer full access to all areas and levels for maintenance.

Geomembranes/Geotextiles
The StormBrixx system shall be wrapped in appropriate permeable geotextile or impermeable geomembrane* (supplied by others) as indicated by project design engineer.

Accessories
The StormBrixx stormwater system shall be used in conjunction with extension shaft**/remote access unit**. See separate Spec Info sheets for further details.

Installation
Storm water system shall be installed in strict accordance with the manufacturer's installation instructions and recommendations.

* Choose one /** Choose none, one or more
[1] Configuration and use of side/top panels will marginally impact these figures

ACO Specification Information

ACO, Inc.

West Sales Office
825 W. Beechcraft Street
Casa Grande, AZ 85122
Tel: (520) 421-9988
Toll-Free: (888) 490-9552
Fax: (520) 421-9899

Northeast Sales Office
9470 Pinecone Drive
Mentor, OH 44060
Tel: (440) 639-7230
Toll-Free: (800) 543-4764
Fax: (440) 639-7235

Southeast Sales Office
4211 Pleasant Road
Fort Mill, SC 29708
Toll-Free: (800) 543-4764
Fax: (803) 802-1063

info@acousa.com
www.acousa.com

© May 2020 ACO, Inc.
All reasonable care has been taken in compiling the information in this document. All recommendations and suggestions on the use of ACO products are made without guarantee since the conditions of use are beyond the control of the company. It is the customer's responsibility to ensure that each product is fit for its intended purpose and that the actual conditions of use are suitable. ACO, Inc. reserves the right to change products and specifications without notice.

ACO. creating the future of drainage